# Where to connect the module optocoupler

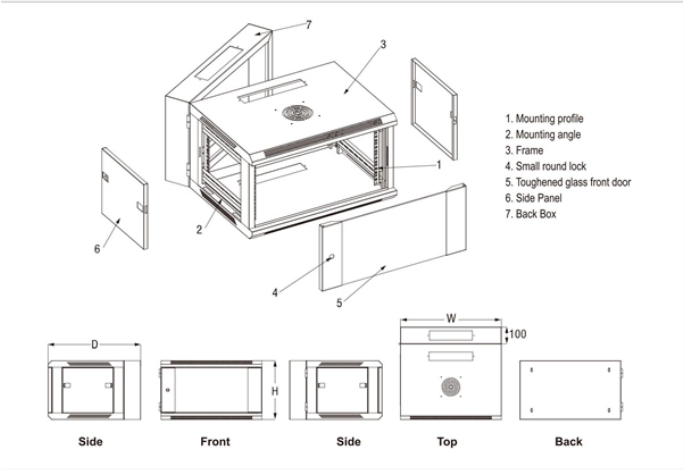


## Overview

The following is a step-by-step guide for setting up the evaluation board, including connection to power sources and signal generators. An optocoupler (or opto-isolator) is a component that transfer signals between circuits using light. In this guide, you'll learn how they work and how you can use one in your own projects. It provides complete isolation between the input and the. There are many different applications for optocoupler circuits, so there are many different design requirements, but a basic design for an optocoupler providing isolation for example between two circuits, simply involves the choice of appropriate resistor values for the two resistors R1 and R2. This HCNR201 High Bandwidth Evaluation Board User Guide provides the necessary information and instructions to effectively evaluate and utilize the Broadcom® HCNR201 high-linearity analog optocoupler in your applications. There is a is a light emitting diode with a phototransistor inside the optocouplers, both of them are isolated from the external environment of the.

© 2026 GDR Telecom Site Energy Systems - All rights reserved

## Where to connect the module optocoupler

| | |
|---|---|
| 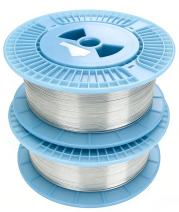 | This circuit uses optocouplers paired with 220-ohm resistors to interface an Arduino Nano with an external device via a 5-pin relimate connector, providing electrical isolation and signal transfer while ... |
| | Connect the input signal source to the designated input terminals (VIN – terminal block J1) on the evaluation board. Ensure that the input signal meets the specified requirements, including amplitude ... |
| | This tutorial gives an introduction to the HY-M154 / 817 optocoupler module. Moreover, a simple application is programmed that shows how to wire and how to program an Arduino when ... |
| | Interfacing PC817 Optocoupler Module with Arduino Step 1: Circuit The following circuit shows how you should connect Arduino to PC817 module. Connect wires accordingly. |
| | The optocoupler is extensively utilized in computer terminals, thyristor control devices, measuring instruments, copiers, automatic ticketing systems, and ... |

© 2026 GDR Telecom Site Energy Systems - All rights reserved

An optocoupler (or opto-isolator) is a component that transfer signals between circuits using light. In this guide, you''ll learn how they work and how you can use one in your own projects.

The optocoupler can be used in many different applications as an interface between low voltage digital, such as 3.3V logic, or 24V control circuits and large mains power electronic devices.

The optocoupler is extensively utilized in computer terminals, thyristor control devices, measuring instruments, copiers, automatic ticketing systems, and household appliances like fans and heaters ...

Today in this tutorial we will see the interfacing optocoupler with Arduino (4N35 or MCT2E). Optocoupler is also called an optoisolator. But before that let''s see what an optoisolator or ...

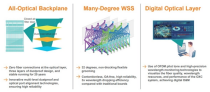


In this project, we will show how to connect an optocoupler chip to a circuit. An optocoupler or optoisolator chip is a chip that allows for electrical isolation between the input of the circuit and the ...

The start of the design process is to specify the input and output conditions the optocoupler is to link. Typical optocouplers can handle input and output currents from a few microamps to tens of milliamps.

© 2026 GDR Telecom Site Energy Systems - All rights reserved

## Contact Us

For more information, pricing, or custom energy solutions, please contact us:

Website: https://gdroofing.co.za
Email: sales@gdroofing.co.za
Phone: +27 72 418 9365
Address: 22 Electron Avenue, Isando, Johannesburg, 1600, South Africa

This document is for informational purposes only. Specifications subject to change without notice.

*© 2026 GDR Telecom Site Energy Systems - All rights reserved*